ARENA CORNER CORNER SINK CORNER

PRODUCT INFORMATION

Article title	Villeroy & Boch Arena corner Corner sink, included Strainer bowl, Waste system hand-operated, Espresso glossy
Article number	672901KS
Assembly / Assembly type	surface-mounted installation
Assembly instructions	Installation on a corner undersink cabinet with 90 cm side length.
Scope of delivery	1 x sink , 1 x basket strainer waste 1 x strainer bowl
Interior depth	180
Collection	Arena corner
Colour name	Espresso glossy
Position of main bowl	Basin centred
Function of the drain fitting	basket strainer waste

TECHNICAL DRAWINGS

672901KS

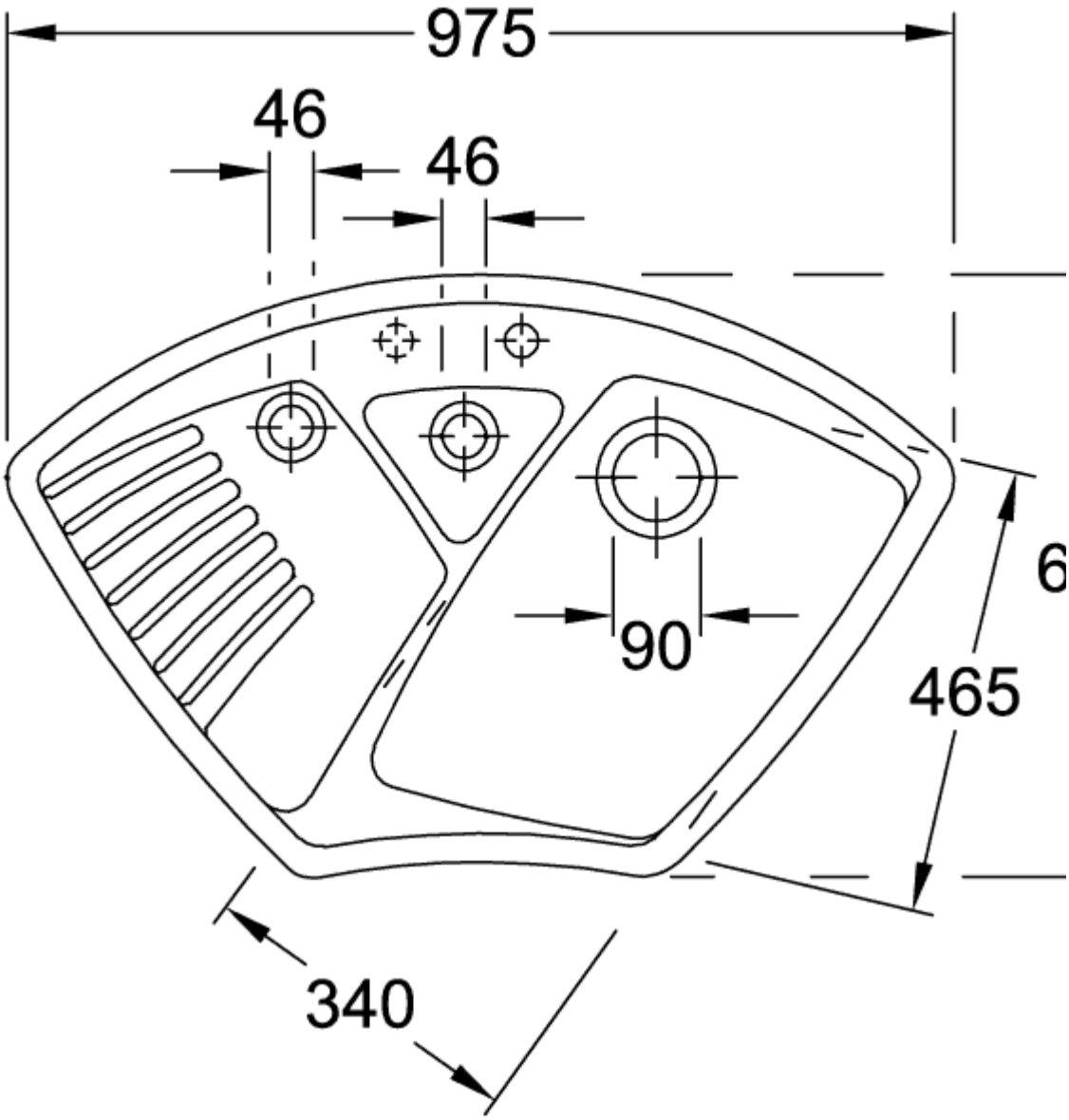
975
46
46
90
465
340

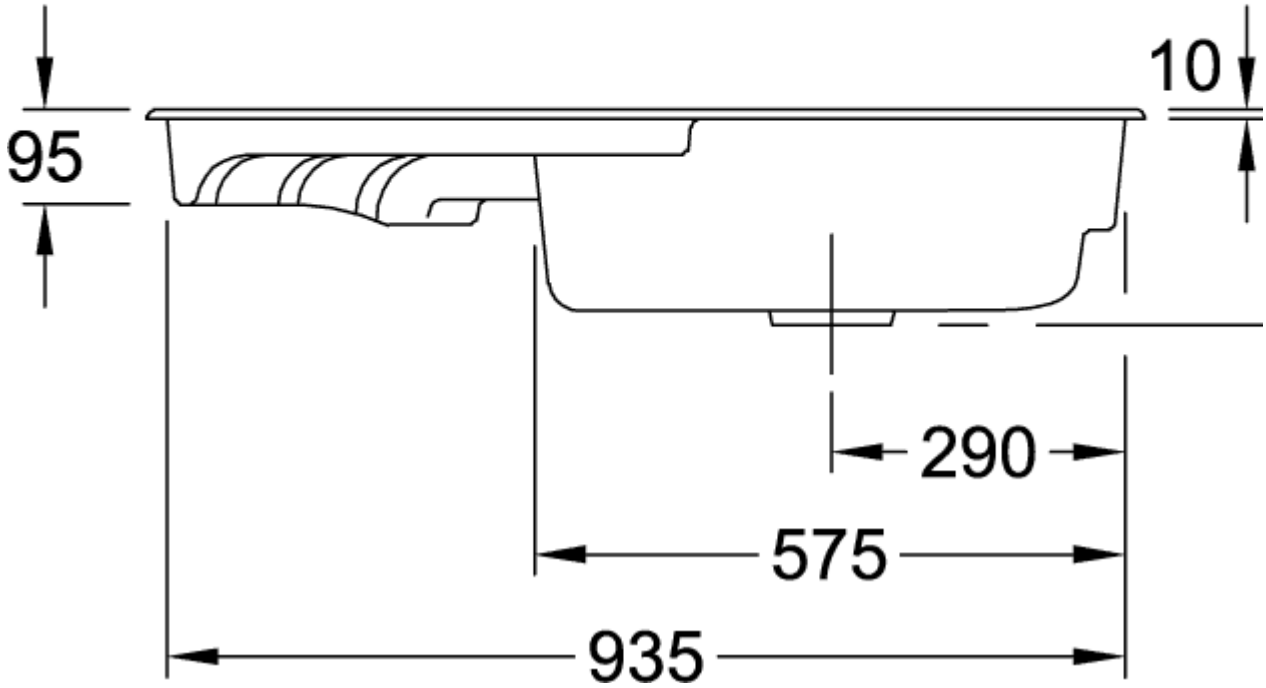
10
95
290
575
935
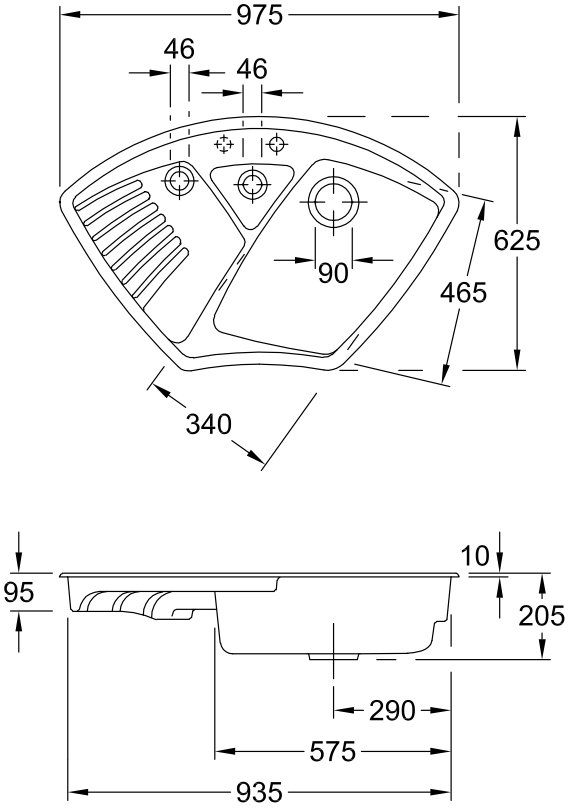
672901KS